# INVENTIVE

## Roof ventilation solutions

RTV-ADIS2 | Inline Slate Vent Adapter

# DATASHEET



**Duct adapter for Timloc Inline Slate Vent (RTV-IS2)**

## Use

- To provide Timloc Inline Slate Vent (RTV-IS2) with a 110mm duct or soil vent pipe connection.

## Features & Benefits

- Compatible with the Timloc Inline Slate Vent RTV-IS2.
- Simply click into position to secure the adapter to the base of the slate vent.
- Provides a precise fit to 110mm duct or Soil Vent Pipe or to other duct sizes using the RTV-ADMULTI duct connector accessory.
- Duct can be secured to the adapter with adjustable screw clamps, zip ties or glued/screwed.

## Quality

- BS 5250: 2021 Management of moisture in buildings – Code of practice.
- Manufactured to BS EN ISO 9001:2015 and BS EN ISO 14001:2015.
- Complies with all relevant Building Regulations 2010.
- Satisfies all NHBC requirements.

## Material & Colour

- Injection moulded Polypropylene.
- Available in Black only.

## Product Dimensions

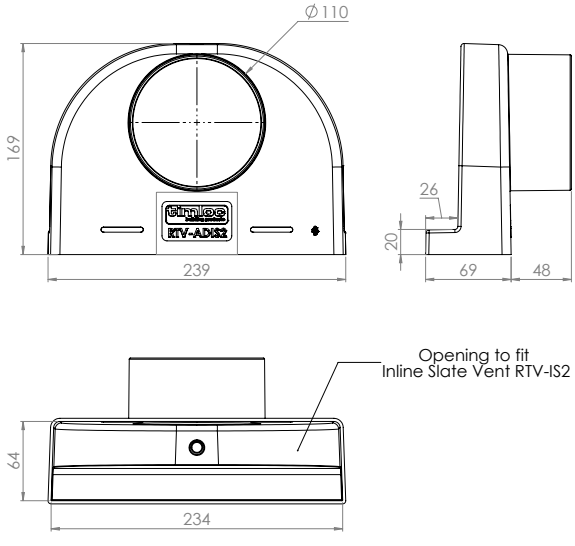


## Environmental Product Declaration

A quantification of environmental information regarding the life cycle of the Inline Slate Vent Adapter (RTV-ADIS2). GWP total is for production stages A1-A3. Verified in accordance with ISO 14025. View the full EPD at timloc.co.uk.

| EPD Reference | EPD Mass (KG) | GWP-fossil, A1-A3 ($kgCO_2e$) |
|---|---|---|
| HUB-1836 | 0.25 | 1.210E-01 |

## Compatible Accessories

- Full datasheets available for all accessories.

| Description | Product Code | Product Image |
|---|---|---|
| Multi adapter (RTV-ADMULTI) to aid connection to 100/110/125/150mm duct sizes | RTV-ADMULTI |  |
| 110mm Flexi-Pipe to aid connection to ventilation duct or soil vent pipe | RTV-KIT1 |  |

## Product Codes

| Product Description | Colour | Weight | Qty | Product Code |
|---|---|---|---|---|
| Inline Slate Vent Adapter | Black | 0.25kg | 10 | RTV-ADIS2 |