METER BOXES by timloc

ELECTRIC METER BOX | 3 PHASE SURFACE MOUNTED

DATASHEET



Designed to house 3 phase electric meters

Use

- Designed to house 3 phase electric meters

Features & Benefits

- Supplied fully assembled with door fitted
- Compliant to British Standard BS 8567:2012
- Fire retardant to BS 476, Part. 7, 1997, Class 2
- Complies to ESI standard 12-3 April, 1986
- Suitable for all meters including prepay and smart
- Will not corrode, weather resistant
- Easily cleaned and can be painted
- Complete with timber backboard, lock and key
- Hinges on right

Quality

- Manufactured to BS EN ISO 9001-2015
- Complies with all relevant Building Regulations
- Meets all relevant British Standards

Material & Colour

- Manufactured from hot pressed glass reinforced polymer (GRP)
- Available in white only

Dimensions

- Overall: 794mm x 565mm x 190mm (H x W x D)

How to Order

- Order as each
- 30003 available in pack quantities only
- State product codes
- Individually boxed and assembled with door

Installation Advice

- This meter box should only be fitted by a suitably qualified person
- Back plate must be removed prior to installation and fixed to the wall
- Box should be fitted so that it is level with its base, ideally 500mm and 1500mm from the finished level
- Using the back plate for reference, mark the fixing holes on the wall, box must be level. Drill and plug the wall
- Secure box to the wall



Disclaimer

- Due to the composition of GRP, surface blemishes including light scratches and pin holes should be anticipated on the meter box. These are inherent in the manufacturing process and will not affect the overall product functionality.

Product Dimensions

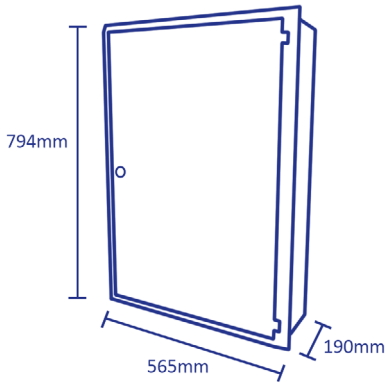

Product Code

Description	Colour	Box Qty	Pack Qty	Lead Time	Product Code
Electric meter box - 3 phase surface mounted	White	1	2	Next Working Day	30003